LZD- 车 载 充 系列　Car charger series

LZD-CZC002
LZD-CZC002

应用 Applicatior

SUITABLE FORINDOORUSE
适用于车内使用

产品证书 Certificate

特 点Features

★输入电压范围是DC12V-24V
★在额定输入电压范围内和满载条件下，工作效率（输出功率/输入功率）≥65%
★额定输出电压：DC5.0V
★空载输出电压：DC5.2V±0.2V
★输出电流范围：1000mA~2000mA
★LED指示：插电时/充电时亮蓝灯
★1年保修
★保护种类:短路/过温度
★当本产品内部温度过高时，内部过温度保护电路动作，使温度降低，不得出现着火或任何破坏

★ Input voltage range is DC12V-24V
★ Working efficiency (output power/input power) ≥65% in rated input voltage range and full load condition
★ Rated output voltage: DC5.0V
★ No-load output voltage: DC5.2V±0.2V
★ Output current range: 1000mA~2000mA
★ LED indicator: Blue light when plugging/charging
★ 1 year warranty
★ Protection type: short circuit/over temperature
★When the internal temperature of the product is too high, the internal over-temperature protection circuit will act to reduce the temperature, and there will be no fire or any damage

Mach.outline Drawing　产品结构尺寸

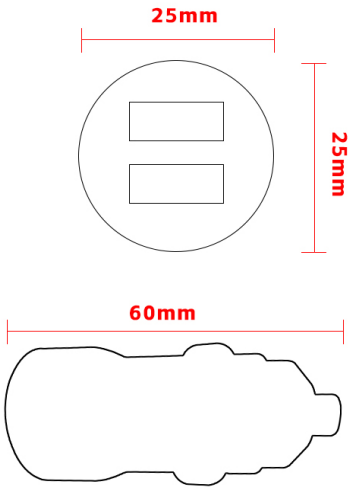

Environment and size环境与尺寸	
Working temperature 工作温度	-10℃--+55℃
Storage temperature 储存温度	-40℃--+85℃
Working Relative Humidity 相对工作湿度	5%--95%
Storage Relative Humidity 储存相对湿度	5%--95%

Electrical Features电性能		
Output voltage range输入电压范围	DC12V-24V	
Work efficiency工作效率	65%	
Rated output voltage 额定输出电压	DC5. 0V	
No load output voltage空载输出电压	DC5. 2V ± 0. 2V	
Output current range输出电流范围	1000mA~2000mA	
Protection 保护	短路保护/过温度保护	
LED indication LED指示	插电时/充电时亮蓝灯	

Model 型号	Output current range 输出电流范围	Rated output voltage 额定输出电压	Weight 重量	Outline size 外形尺寸(MM)	Efficiency 效率	Frequency 频率	Safe approval 安规认证
LZD-CZC002	1000mA~2000mA	5.0V	16. 4g	60*25*25	65%	10-55Hz	CE，FCC，ROHS